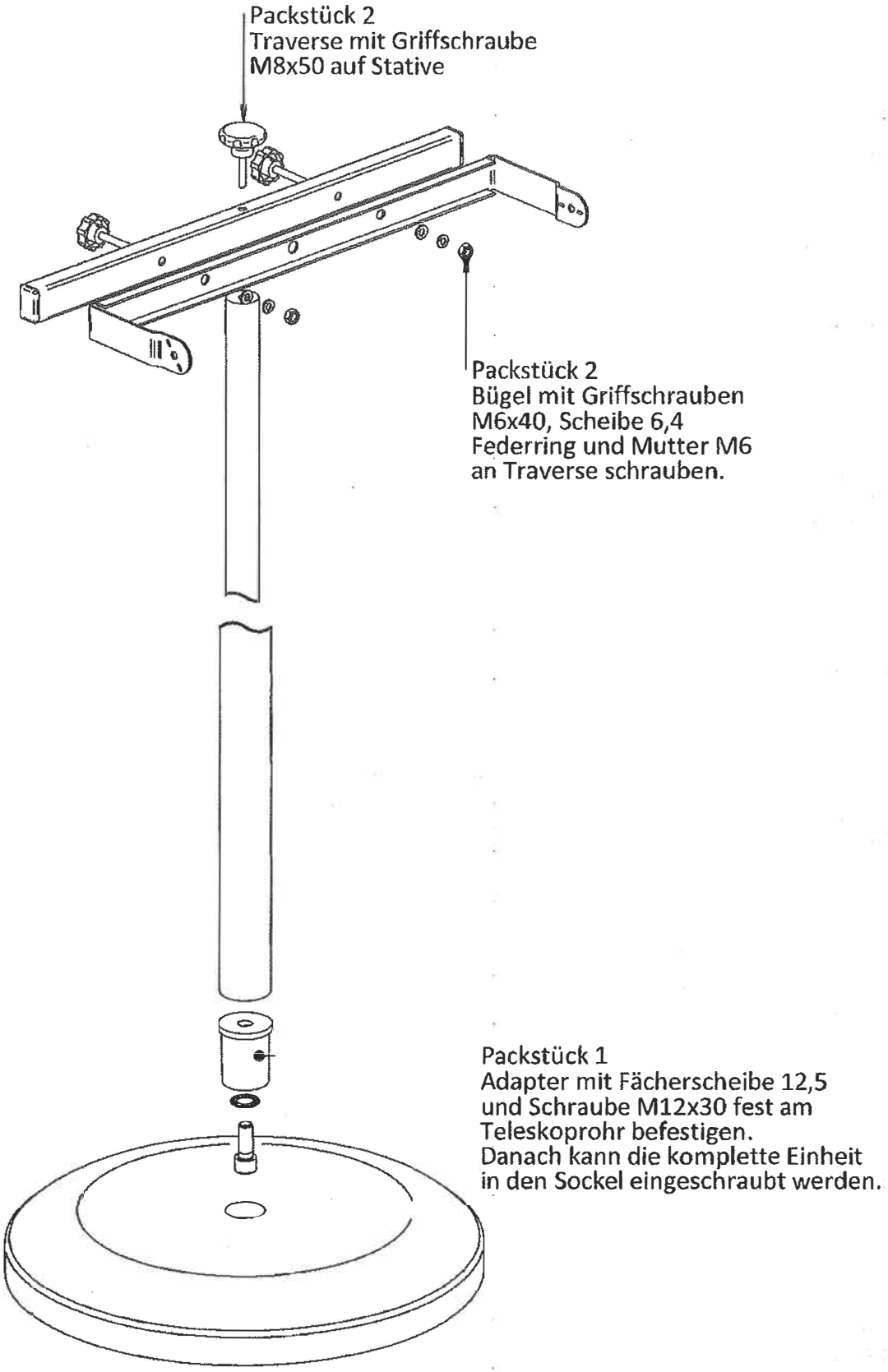

MA 9100505.dft